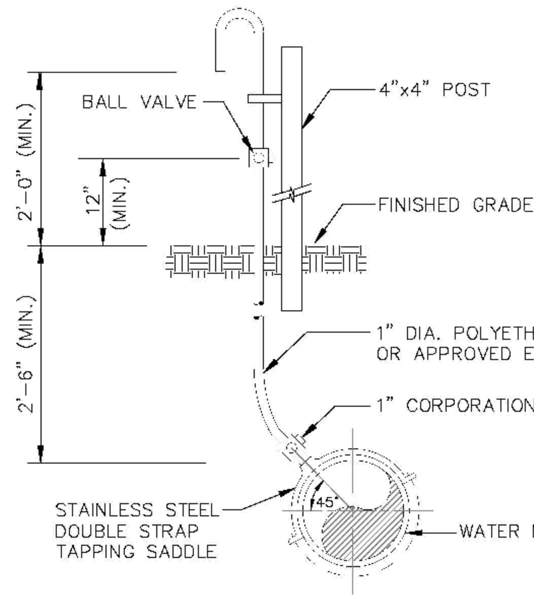

SAMPLE POINT (MAIN)

ALL D.I.P. TO BE PAINTED BLUE ON TOP HALF OF PIPE.

ENGINEERING STANDARDS 2019

REVISIONS				
BY	DATE	ENGINEERING DIVISION CITY OF POMPANO BEACH	SAMPLE POINT (MAIN)	DATE: JUNE 1996 DWG. NO. 100-1
S.S.	04-2005	SCALE: N.T.S.		

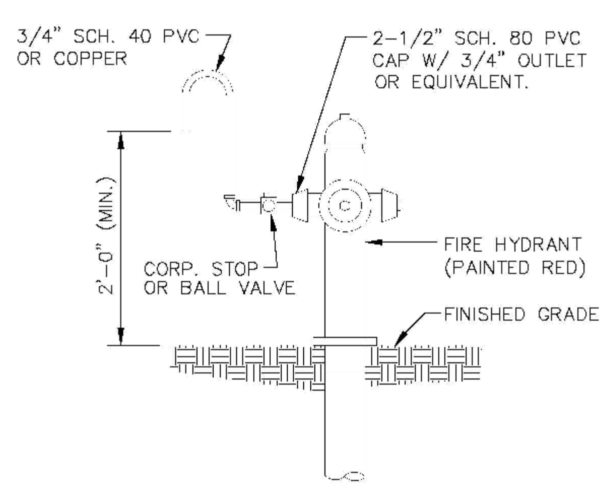

SAMPLE POINT (HYDRANT)

ALL POMPANO BEACH HYDRANTS SHALL BE PAINTED RED.

ALL D.I.P. TO BE PAINTED BLUE ON TOP HALF OF PIPE.

ENGINEERING STANDARDS 2019

REVISIONS				
BY	DATE	ENGINEERING DIVISION CITY OF POMPANO BEACH	SAMPLE POINT (HYDRANT)	DATE: JUNE 1996 DWG. NO. 101-1
S.S.	04-2005	SCALE: N.T.S.		

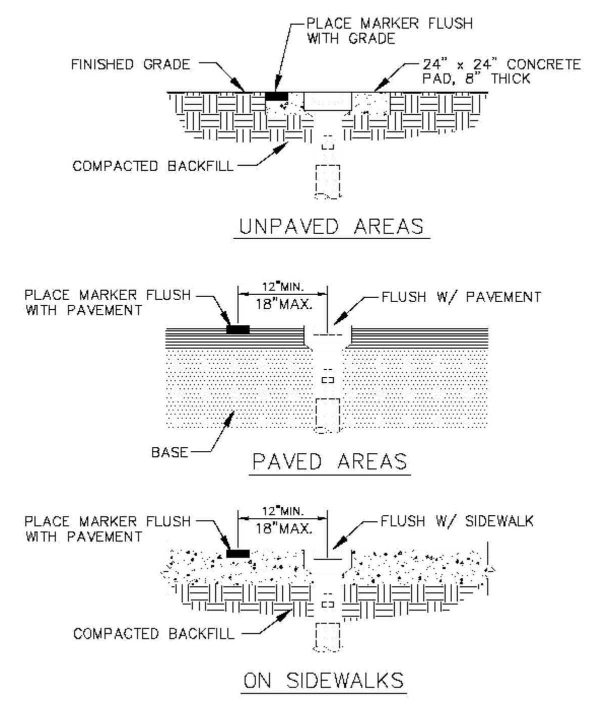

VALVE BOX SETTINGS

ENGINEERING STANDARDS 2019

REVISIONS				
BY	DATE	ENGINEERING DIVISION CITY OF POMPANO BEACH	VALVE BOX SETTINGS	DATE: JUNE 1996 DWG. NO. 102-1
S.S.	04-2005	SCALE: N.T.S.		

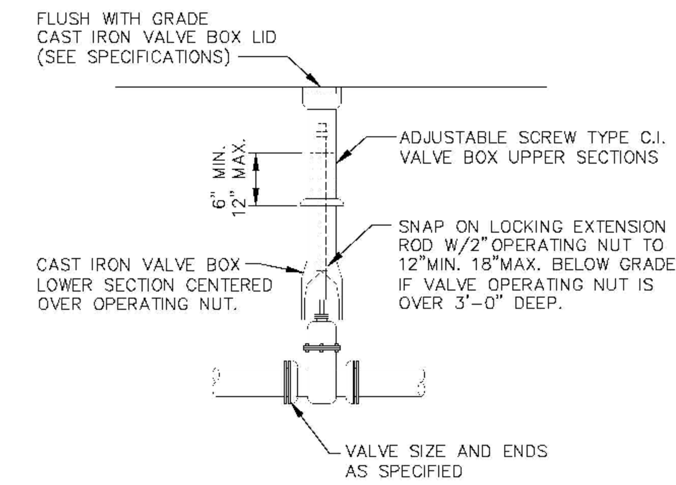

GATE OR PLUG VALVE SETTING

USE MEGALUGS AT ALL PIPE JOINTS

ALL D.I.P. TO BE PAINTED BLUE ON TOP HALF OF PIPE.

ENGINEERING STANDARDS 2019

REVISIONS				
BY	DATE	ENGINEERING DIVISION CITY OF POMPANO BEACH	GATE OR PLUG VALVE SETTINGS	DATE: JUNE 1996 DWG. NO. 103-1
S.S.	04-2005	SCALE: N.T.S.		
T.W.	11-2007			

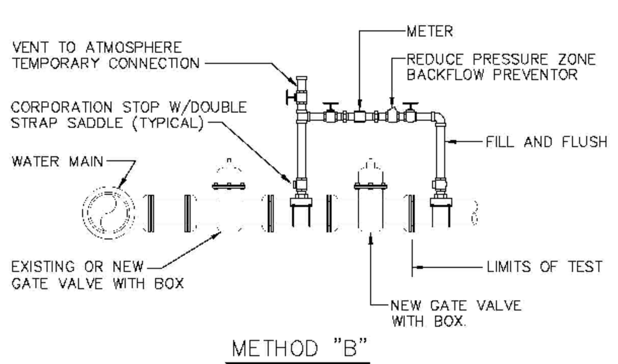

NOTES:

1. WATER MAIN TO BE PRESSURE TESTED AND DISINFECTED ACCORDING TO BROWARD COUNTY PUBLIC HEALTH UNIT REGULATIONS, AWWA, AND MUNICIPAL SPECIFICATIONS IN EFFECT.
2. BACTERIOLOGICAL TESTS ARE TO BE PERFORMED BY THE CONTRACTOR AND AN APPROVED TESTING LABORATORY.
3. REMOVE TEMPORARY CONNECTION AT SADDLE ON NEW MAINS AFTER FILLING AND FLUSHING HAS BEEN COMPLETED AND REPLACE WITH BRASS PLUG
4. PROVIDE ALL NECESSARY THRUST BLOCKS OR OTHER RESTRAINTS.
5. FILLING AND FLUSHING LOCATIONS SHALL BE COORDINATED BY THE CONTRACTOR, ENGINEER, AND CITY.
6. VENT TO ATMOSPHERE SHALL REMAIN OPEN DURING ALL PHASES OF PRESSURE TESTING.
7. AFTER COMPLETION FILL AND FLUSH CONNECTION
8. USE MEGALUGS AT ALL PIPE JOINTS

FILLING AND FLUSHING CONNECTION

ALL D.I.P. TO BE PAINTED BLUE ON TOP HALF OF PIPE.

ENGINEERING STANDARDS 2019

REVISIONS				
BY	DATE	ENGINEERING DIVISION CITY OF POMPANO BEACH	FILLING / FLUSHING CONNECTION	DATE: JUNE 1996 DWG. NO. 104-1
S.S.	04-2005	SCALE: N.T.S.		
T.W.	11-2007			
S.S.	01-2012			

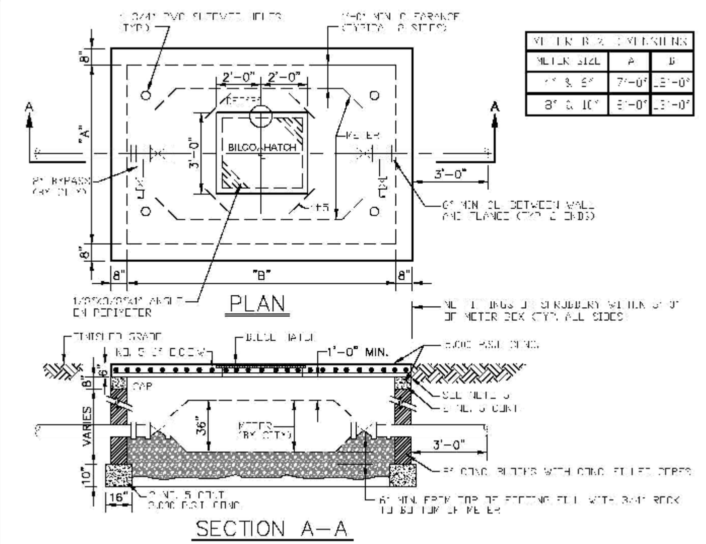

METER BOX DIMENSIONS		
METER SIZE	A	B
4" & 6"	7'-0"	[illegible]
8" & 10"	8'-0"	[illegible]

NOTES

1. THIS STRUCTURE & LID ARE FOR NON-TRAFFIC BEARING ONLY.
2. DO NOT CONSTRUCT METER BOX UNTIL AFTER METER IS IN PLACE.
3. CENTER BOX AROUND METER.
4. DO NOT TIE CONCRETE LID TO CONCRETE WALLS.
5. TOP OF LID TO BE @ FINISH GRADE ELEV.
6. CUT OUT REPLACEABLE 10" SQUARE OVER EACH READING HEAD & FASTEN W/CHAIN.
7. FITS NEPTUNE R450 ANTENNA.
8. BILCO HATCH MODEL J-AL OR JD-AL OR EQUAL

LARGE METER BOX

ENGINEERING STANDARDS 2019

REVISIONS				
BY	DATE	ENGINEERING DIVISION CITY OF POMPANO BEACH	LARGE METER BOX	DATE: JUNE 1996 DWG. NO. 105-1
T.W.	03-2008	SCALE: N.T.S.		
S.S.	01-2012			
S.S.	11-2012			

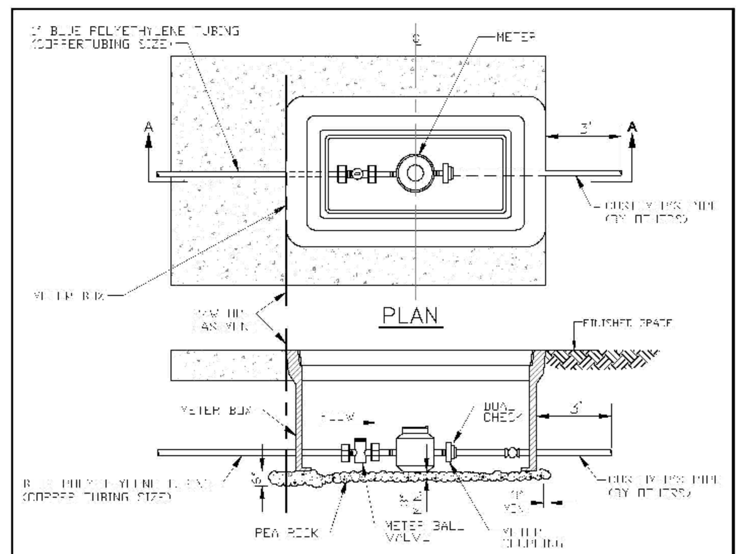

NOTES

2. METER SHALL BE CENTERED IN BOX
3. DUAL CHECK IS SAME SIZE AS CUSTOMER'S SERVICE LINE.

METER SIZE	AY NO LENGTH (IN)	HEIGHT (IN)
5/8"	7.5	4.39
1"	[illegible]	5.75

METER BOX INSTALLATION

ENGINEERING STANDARDS 2019

REVISIONS				
BY	DATE	ENGINEERING DIVISION CITY OF POMPANO BEACH	METER BOX INSTALLATION FOR 5/8" AND 1" METERS	DATE: JAN. 2012 DWG. NO. 105-2
S.S.	11-2012	SCALE: N.T.S.		

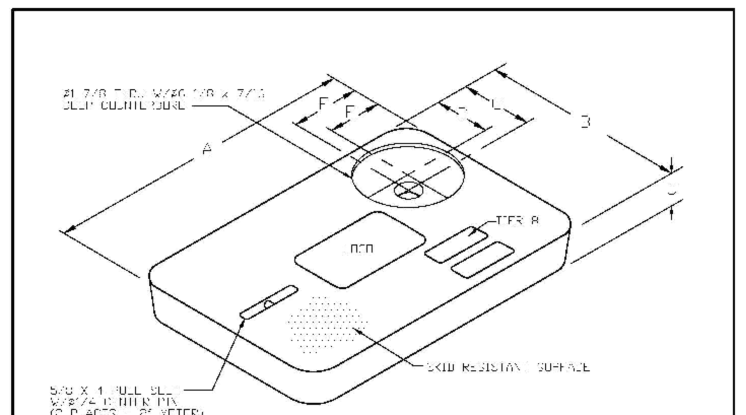

METER BOX COVER DIMENSIONS (IN)							
METER SIZE	A	B	C	D	[illegible]	[illegible]	[illegible]
[illegible]	[illegible]	[illegible]	[illegible]	[illegible]	4"	4 9/16"	[illegible]
1 1/2"	23 1/4"	13 3/4"	3"	4"	4"	4 9/16"	4 9/16"
2"	30 1/2"	[illegible]	3"	[illegible]	[illegible]	4 9/16"	4 9/16"

NOTES

1. CUSTOMER IS CITY OF POMPANO BEACH FLORIDA LOGO TO BE SPECIFIED: CITY OF POMPANO BEACH POTABLE WATER
2. FITS NEPTUNE R450 ANTENNA
3. THIS COVER IS RATED FOR A STATIC DESIGN LOAD OF 8,000 LBS. (35,548 N) OVER A 10 (254) X 10 (254) AREA AND MUST PASS A MINIMUM STATIC TEST LOAD OF 12,000 LBS (53,376 N).
4. METER BOX COVER SHOULD BE RATED FOR TRAFFIC CONDITION AS DETERMINED BE ENGINEER OF RECORD.

POTABLE WATER METER BOX COVER

ENGINEERING STANDARDS 2019

REVISIONS				
BY	DATE	ENGINEERING DIVISION CITY OF POMPANO BEACH	TYPICAL METER BOX COVER	DATE: JAN. 2012 DWG. NO. 105-3
S.S.	11-2012	SCALE: N.T.S.		

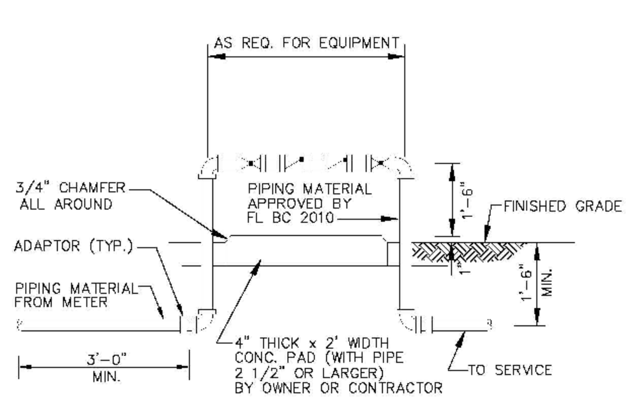

BACKFLOW PREVENTER

USE MEGALUGS AT ALL PIPE JOINTS 3" AND LARGER
PLEASE SEE METER INSTALL DIMENSION LIST ON STANDARD NO. 106-4
SMALL UNITS UNI-STRUT SUPPORT

ENGINEERING STANDARDS 2019

REVISIONS				
BY	DATE	ENGINEERING DIVISION CITY OF POMPANO BEACH	BACKFLOW PREVENTER	DATE: JUNE 1996 DWG. NO. 106-1
T.W.	04-2008	SCALE: N.T.S.		
S.S.	03-2009			
S.S.	11-2012			
S.S.	01-2013			

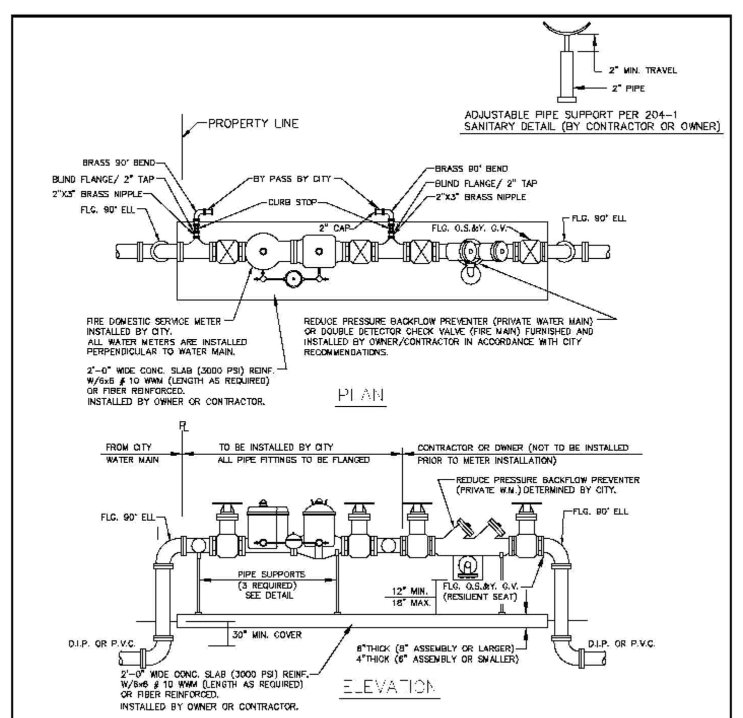

MASTER METER AND BACKFLOW DEVICE DETAILS FIRE AND DOMESTIC COMBINED SOURCE

NOTES

1. THE BACKFLOW PREVENTOR FOR THE BY-PASS SHALL BE DDCV OR RPZ.
2. PLEASE NOTE THAT WATER METERS 3" AND LARGER ARE SUBJECT TO AN APPROXIMATE ORDER LEAD TIME OF 60 TO 75 DAYS AFTER FULL PAYMENT. PLEASE CONTACT CUSTOMER SERVICE AT 954-786-4637 TO ARRANGE FOR METER PROCUREMENT AND INSTALLATION.
3. USE MEGALUGS AT ALL PIPE JOINTS
4. PLEASE SEE METER INSTALL DIMENSION LIST ON STANDARD NO. 106-4

ENGINEERING STANDARDS 2019

REVISIONS				
BY	DATE	ENGINEERING DIVISION CITY OF POMPANO BEACH	MASTER METER AND BACKFLOW DEVICE	DATE: JUNE 1996 DWG. NO. 106-2
S.S.	05-2011	SCALE: N.T.S.		
S.S.	11-2012			
S.S.	12-2013			
S.S.	11-2016			

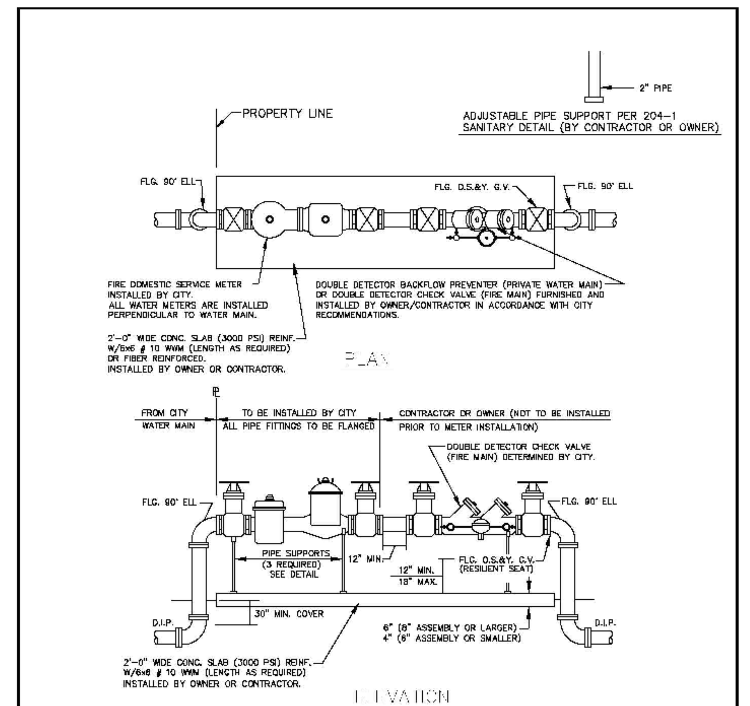

FIRE ONLY METER AND BACKFLOW DEVICE DETAILS

NOTES

1. THE BACKFLOW PREVENTOR FOR THE BY-PASS SHALL BE DDCV OR RPZ.
2. PLEASE NOTE THAT WATER METERS 3" AND LARGER ARE SUBJECT TO AN APPROXIMATE ORDER LEAD TIME OF 60 TO 75 DAYS AFTER FULL PAYMENT. PLEASE CONTACT CUSTOMER SERVICE AT 954-786-4637 TO ARRANGE FOR METER PROCUREMENT AND INSTALLATION.
3. USE MEGALUGS AT ALL PIPE JOINTS
4. PLEASE SEE METER INSTALL DIMENSION LIST ON STANDARD NO. 106-4

ENGINEERING STANDARDS 2019

REVISIONS				
BY	DATE	ENGINEERING DIVISION CITY OF POMPANO BEACH	FIRE ONLY METER AND BACKFLOW DEVICE	DATE: JUNE 1996 DWG. NO. 106-3
S.S.	05-2011	SCALE: N.T.S.		
S.S.	11-2012			
S.S.	12-2013			
S.S.	11-2016			

FIRE METERS - OS & Y VALVES, GASKETS, SPOOL & METER

(NEPTUNE HP FIRE SERVICE TURBINE METER)

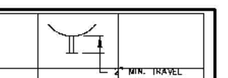

SIZE	VALVES (2)	GASKETS (4)	METER	TOTAL LENGTH
3"	16"	1/2"	26 1/8"	42 5/8"
4"	18"	1/2"	35"	53 1/2"
6"	21"	1/2"	44 7/8"	66 3/8"
8"	23"	1/2"	51 5/16"	74 13/16"
10"	26"	1/2"	56"	82 1/2"

FIRE SERVICE METERS - TEES, OS & Y VALVES, GASKETS & METERS

(HP PROTECTUS III FIRE SERVICE METER)

SIZE	TEES (2)	VALVES (2)	GASKETS (6)	METER	TOTAL LENGTH
4" X 1"	4" X 3" - 26"	18"	3/4"	33"	77 3/4"
6" X 1 1/2"	6" X 4" - 32"	21"	3/4"	45"	98 3/4"
8" X 2"	8" X 4" - 36"	23"	3/4"	53"	112 3/4"
10" X 2"	10" X 6" - 44"	26"	3/4"	68"	138 3/4"

COMPOUND METERS - STRAINER, TEE, OS & Y VALVES, GASKETS & METERS

(NEPTUNE TRU/FLOW COMPOUND METER)

SIZE	STRAINER	TEES (2)	VALVES (2)	GASKETS	METER	TOTAL LENGTH
3"	6"	3" X 3" - 22"	16"	3/4"	17"	61 3/4"
4"	7 1/2"	4" X 4" - 26"	18"	3/4"	20"	72 1/4"
6"	9"	6" X 4" - 32"	21"	3/4"	24"	86 1/4"
6" X 8"	10"	8" X 4" - 36"	23"	3/4"	55 3/8"	125 1/8"

*All fittings, valves and meters are flanged & all dimensions are from face of flange to face of flange.

NOTE

PLEASE NOTE THAT WATER METERS 3" AND LARGER ARE SUBJECT TO AN APPROXIMATE ORDER LEAD TIME OF 60 TO 75 DAYS AFTER FULL PAYMENT. PLEASE CONTACT CUSTOMER SERVICE AT 954-786-4637 TO ARRANGE FOR METER PROCUREMENT AND INSTALLATION.

ENGINEERING STANDARDS 2019

REVISIONS				
BY	DATE	ENGINEERING DIVISION CITY OF POMPANO BEACH	METER INSTALL DIMENSION LIST	DATE: FEB. 2008 DWG. NO. 106-4
T.W.	02-2008	SCALE: N.T.S.		
S.S.	12-2013			
S.S.	11-2016			

J:\City STANDARDS\2019 Standards Details\Water 1 1.dwg, 11/2/2018 2:33:16 PM

REVISIONS:
1. 01/14/19 DRC COMMENTS
2.
3.
4.
5.
6.
7.
8.

CLIENT:
MICHAEL A. FORGIONE
1060 N.E. 27th WAY
POMPANO BEACH, FL 33062

PROJECT:
Universal Air and Heat
980 SW 12th Avenue
POMPANO BEACH FLORIDA

TASK:
CONSTRUCTION DETAILS

GGB Engineering, Inc.
CIVIL AND FORENSIC ENGINEERS • LAND PLANNERS • CONSTRUCTION MANAGERS
FLORIDA REGISTRATION No. 8118
2699 Stirling Road, Suite C-202
Fort Lauderdale, Florida 33312
Phone: (954) 986-9899
Fax: (954) 986-6655

DATE:	SCALE:
July 2017	N.T.S.
DESIGNED BY:	DRAWN BY:
G.G.B.	M.M.

PROJECT NO. 17-1172

SHEET 005

Gary G. Bloom, State of Florida, Professional Engineer, License No. 19832
This item has been electronically signed and sealed by Gary G. Bloom, PE. on 9/10/10 using a SHA-1 authentication code.
Printed copies of this document are not considered signed and sealed and the SHA-1 authentication code must be verified on any electronic copies.

gary g bloom
Digitally signed by gary g bloom
DN: cn=gary g bloom c=US o=ggb engineering
Reason: I attest to the accuracy and integrity of this document
Location:
Date: 2020-09-10 12:43-04:00

AAC
PZ18-12000037
10/06/2020